INSTRUCTIONS

SIDEMOUNT GUIDES
2032 FOR 1-1/2 [38mm]
DOOR THICKNESS

www.johnsonhardware.com

MULTI-PASS POCKET DOOR
100MP SERIES FOR 1-1/2" DOORS

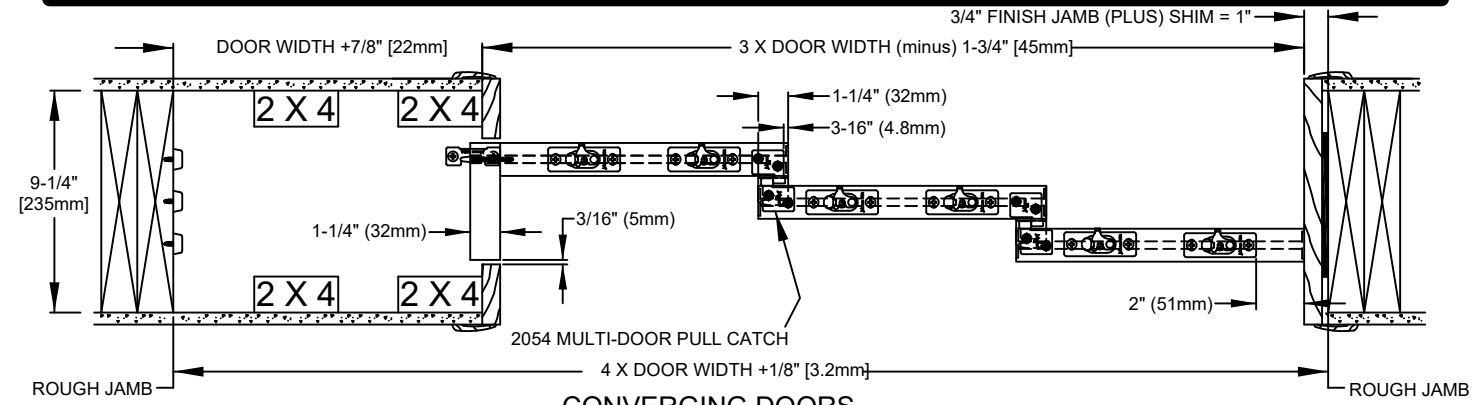

CONVERGING DOORS

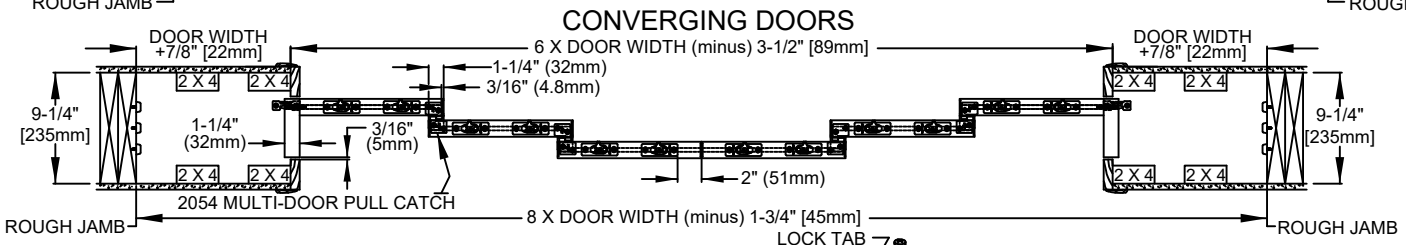

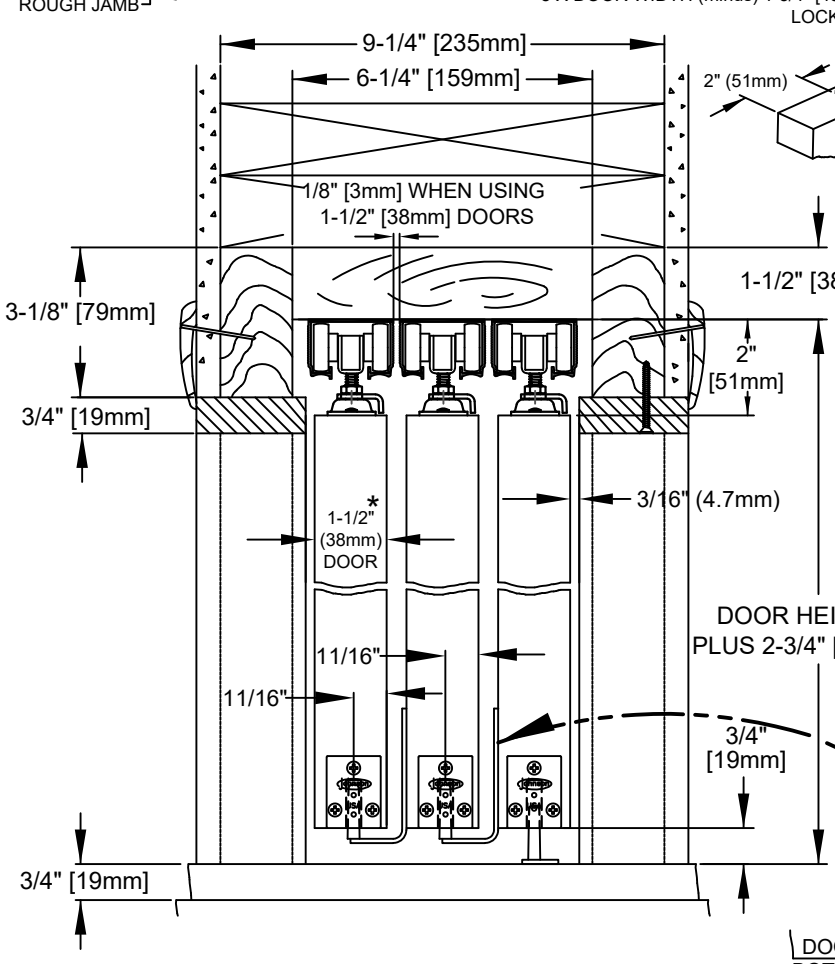

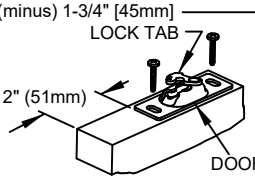

TRACK SPACING

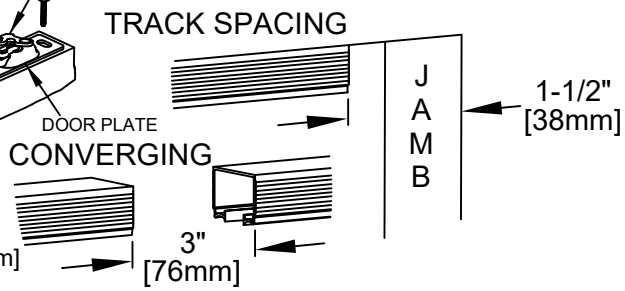

VIEW OF 2054 MULTI-DOOR PULL CATCH

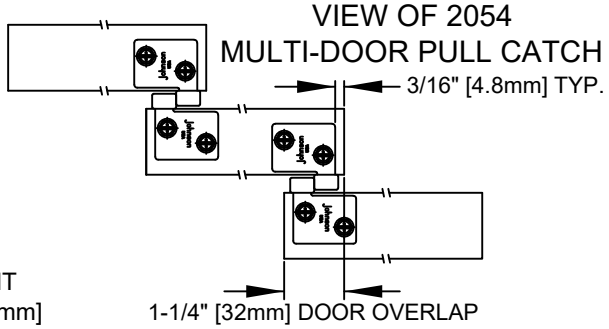
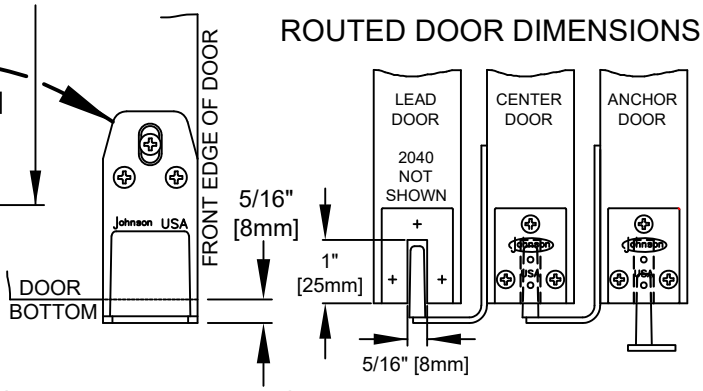
ROUTED DOOR DIMENSIONS