INSTRUCTIONS

www.johnsonhardware.com

MULTI-PASS POCKET DOOR 100MP SERIES

SIDEMOUNT GUIDES
2032 FOR 1-3/8 [35mm],
2033 FOR 1-3/4" [45mm],
2036 FOR 2-1/4" [57mm]
DOOR THICKNESS

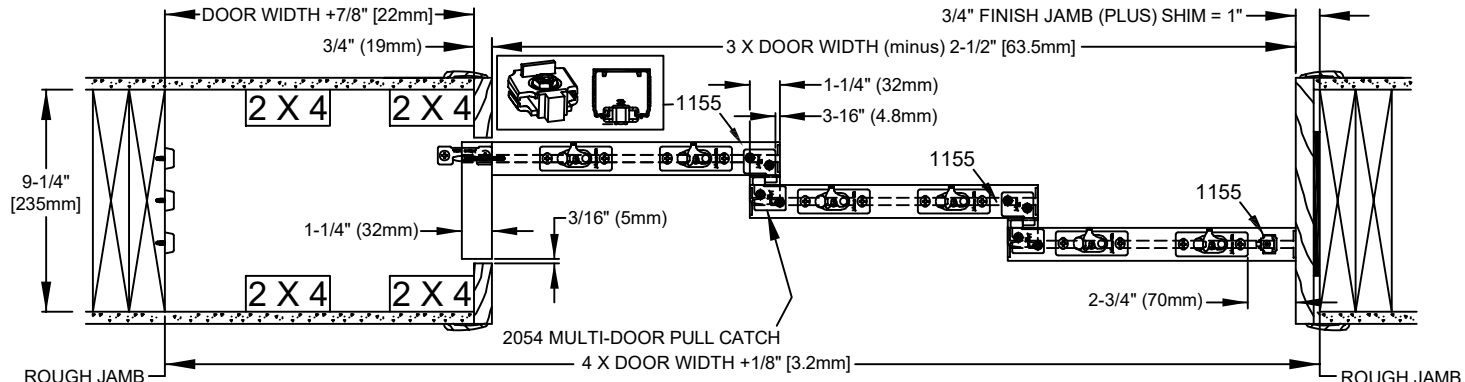

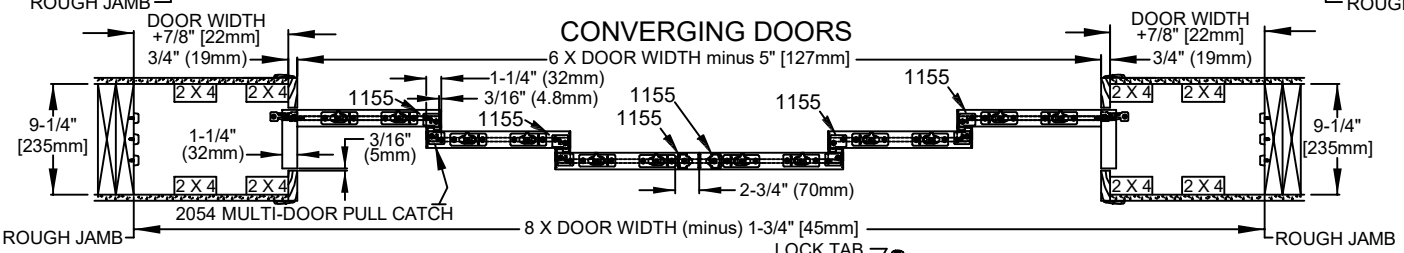

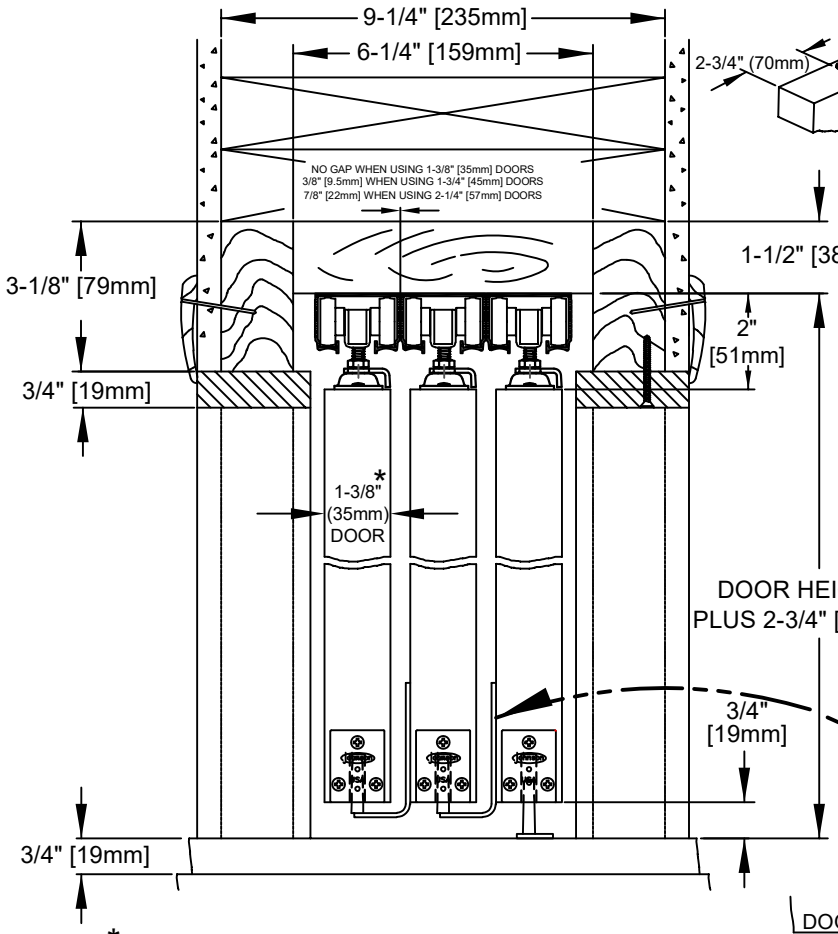

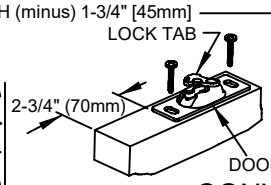

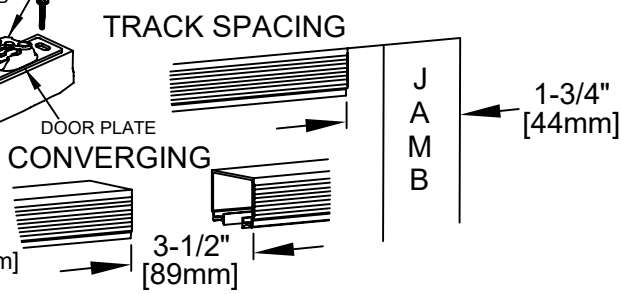

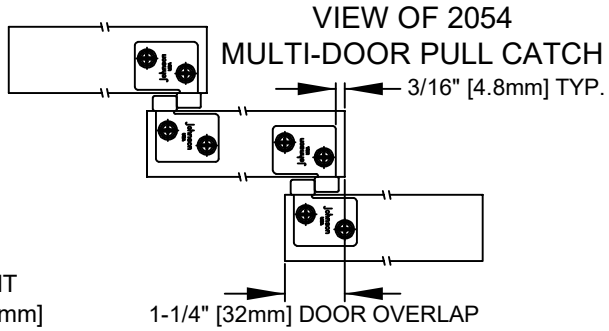

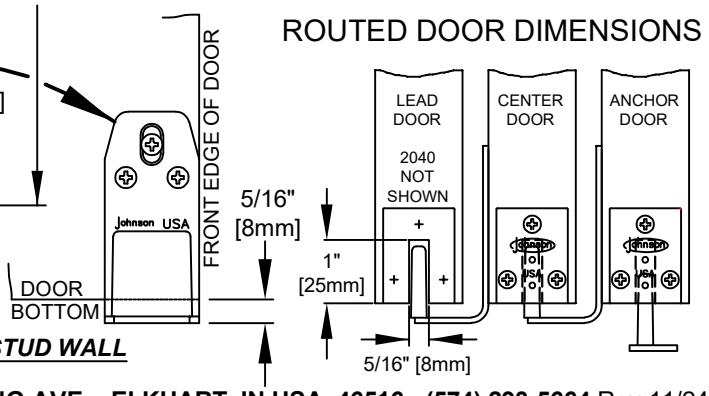

*1-3/8" (35mm) DOOR REQUIRES A 2 X 10 STUD WALL

1-3/4" (45mm) & 2-1/4" (57mm) DOOR REQUIRES A 2 X 12 STUD WALL

 ©2019 All rights reserved L. E. Johnson Products, INC.