INSTRUCTIONS

100MD

FOR 1-1/8 (29mm), 1-3/8" (35mm), 1-3/4" (45mm), TO 2-1/4" (57mm)

www.johnsonhardware.com
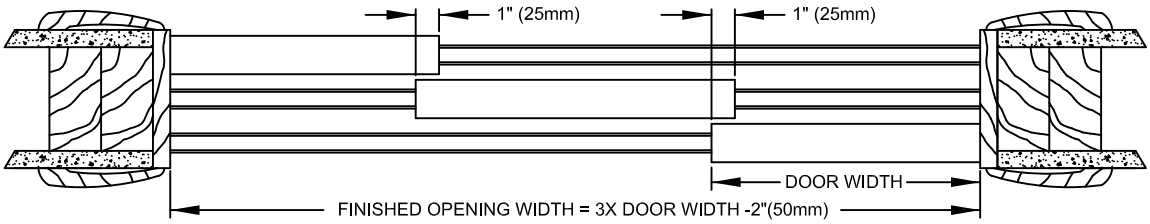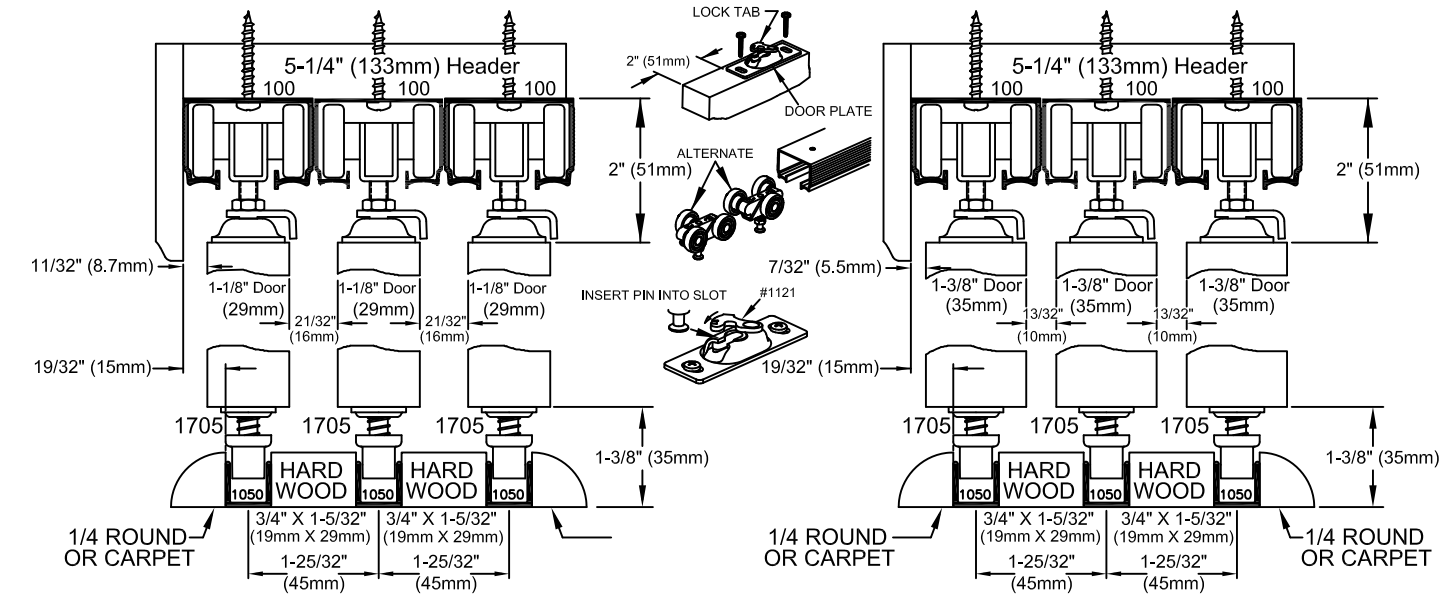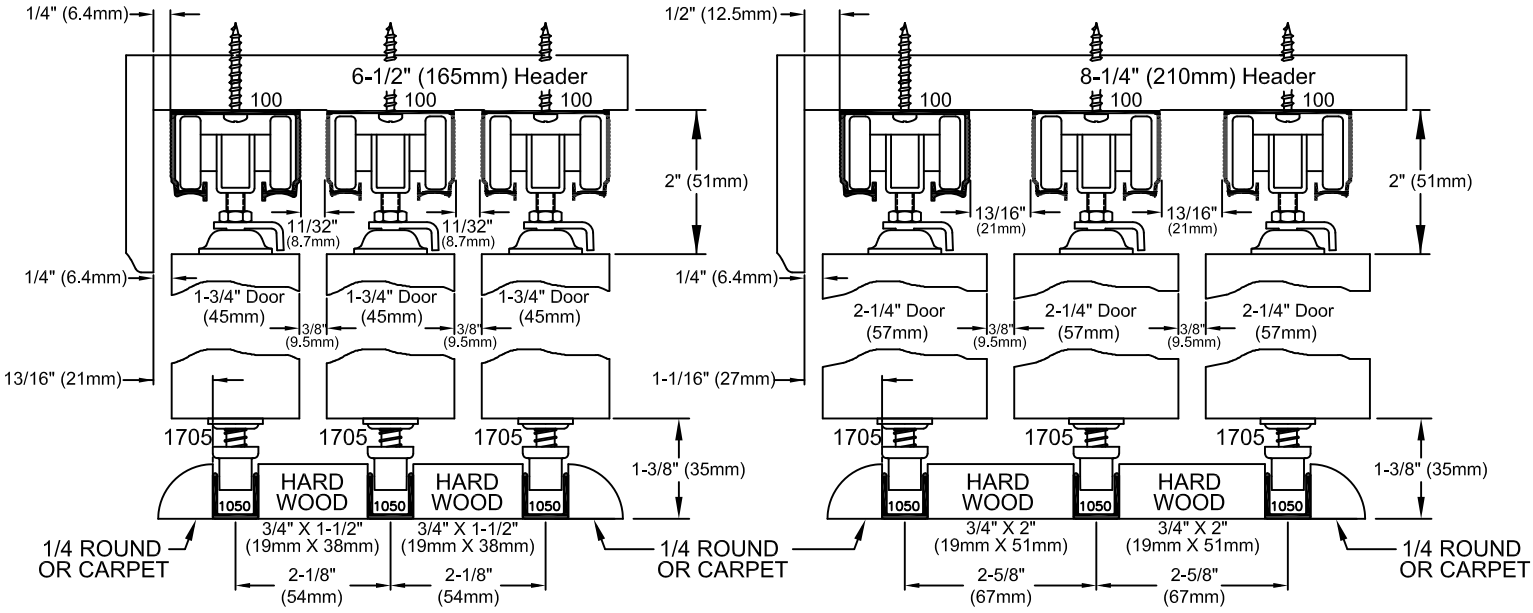
MULTI-PASS SLIDING DOOR HARDWARE
FINISHED OPENING WIDTH = 3X DOOR WIDTH -2" (50mm)
SURFACE MOUNTED 1050 FINISHED OPENING = DOOR HEIGHT +3-3/8 (86mm)
RECESSED 1050 FINISHED OPENING = DOOR HEIGHT +2-3/4 (70mm)